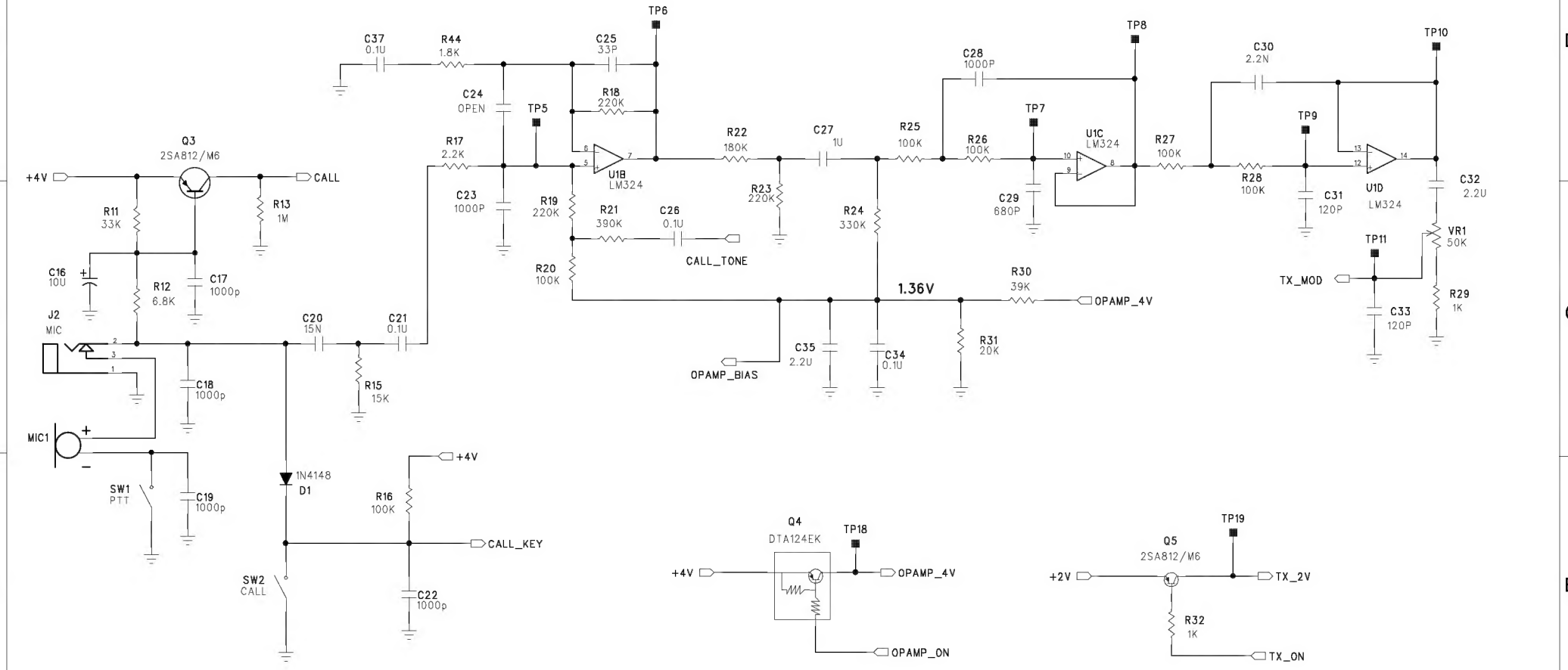

REVISION RECORD			
LTR	ECO NO:	APPROVED:	DATE:

COMPANY:	ALBRECHT ELECTRONIC GMBH		
TITLE:	LPD "FROGGY" TX AUDIO		
DRAWN: A.LAM	DATED: 19/7/98	CODE: H244	SIZE:
CHECKED: W.SCH	DATED: 27/8/98	DRAWING NO: FR-TXA-0.SCH	REV:
QUALITY CONTROL:	DATED:		
RELEASED:	DATED:	SCALE:	SHEET: 2 OF 3